SYSTEM
INTERCONNECTION DIAGRAM
FOR GYRODOS ROBOTICS'
FLOAT MAGIKARP

La Salle College Robotics Team

Gyrodos ROBOTICS
EST. 2024 • HKG

Fuse Selection
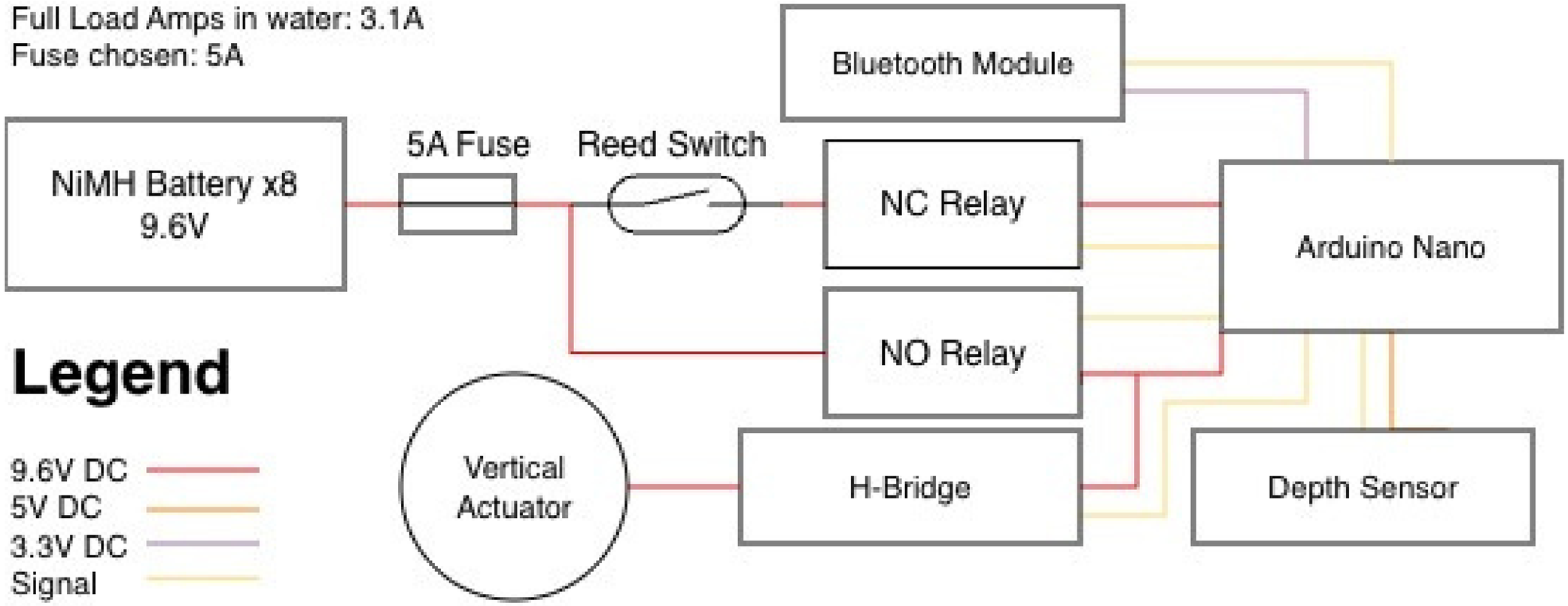
Full Load Amps in water: 3.1A
Fuse chosen: 5A